LED wiring for Permaconn Outputs

Background:

The circuit must provide sufficient current to light the LED at the required brightness, but must limit the current to prevent damaging the LED by using a series resister.

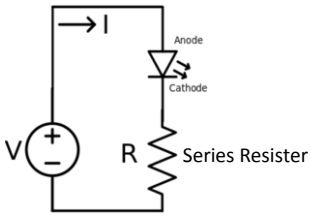

Simple LED circuit

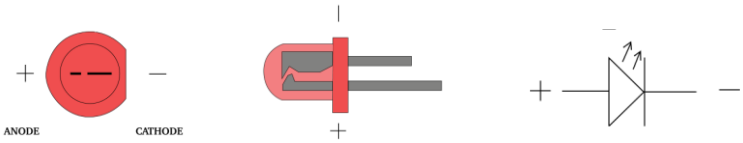

LED Polarity (longest leg is +ve)

Example shown as a PM45v3-3G with 3 x LEDS connected to outputs 1, 2 & 3.

Using 3v LED's and 3k3Ω series resistors.

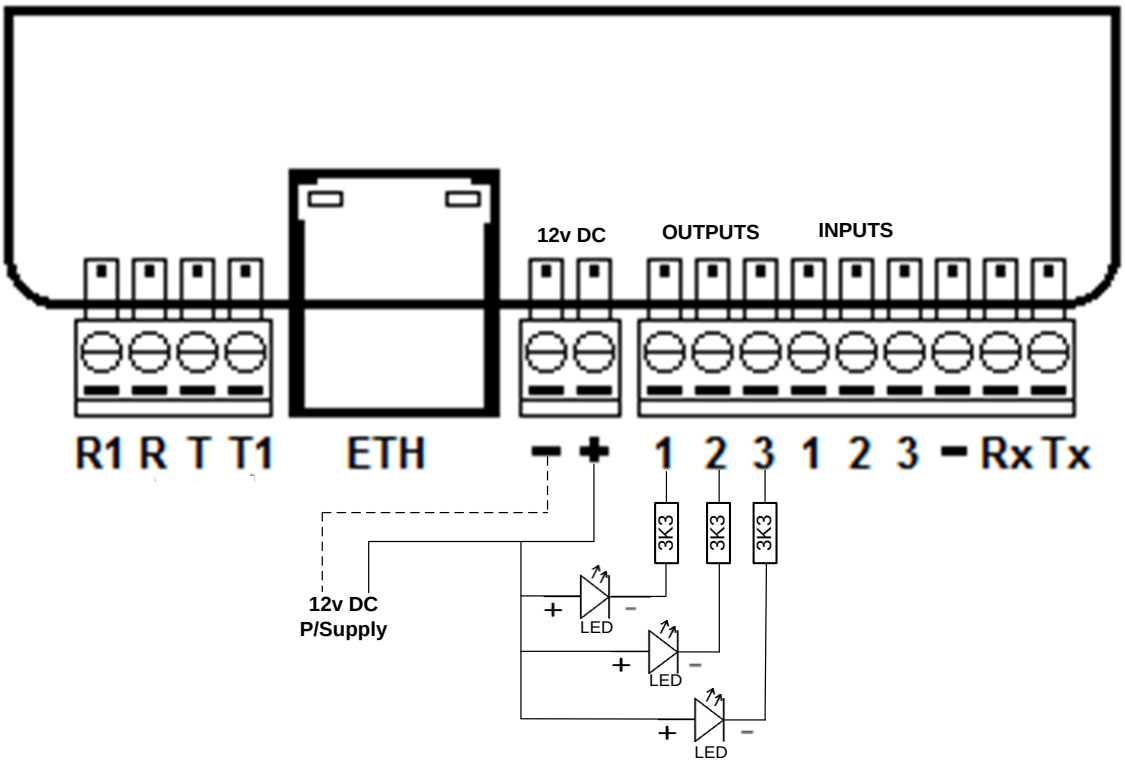

- As a Pocket Secure User only the pulse feature is available, when activated the LED will illuminate for approx 0.5sec.
- Atlas users can pulse the desired output or turn on (closed option) or turn off (open option) .